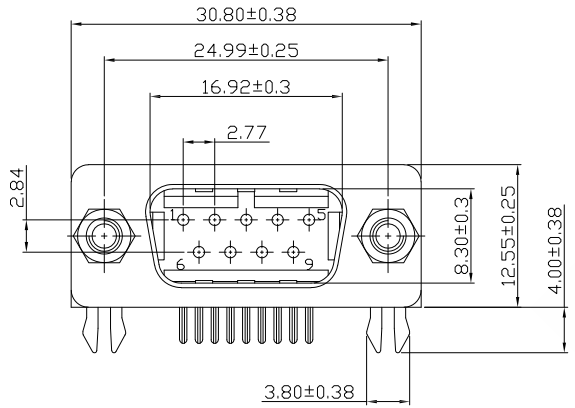

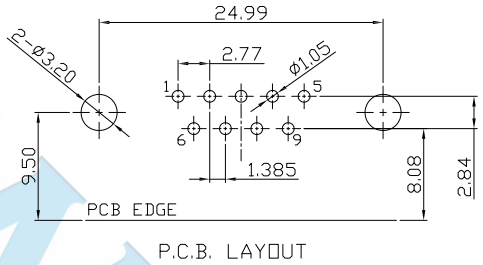

MATERIALS:

1. Housing: PBT (UL 94V-0), Black
2. Contacts: Brass
3. Shell: SPCC
4. Rivet: Copper Alloy(Lead≦40000PPM)
5. Board Lock: SPCC
6. Screw: SPCC(Lead≦40000PPM)

FINISH:

1. Contacts: Gold Flash Plated on Contact Area
   Sn Plated on Soldertails
   Nickel Under Plated Over All
2. Shell: Nickel Plated
3. Rivet: Nickel Plated
4. Board Lock: Sn Plated
5. Screw: Nickel Plated

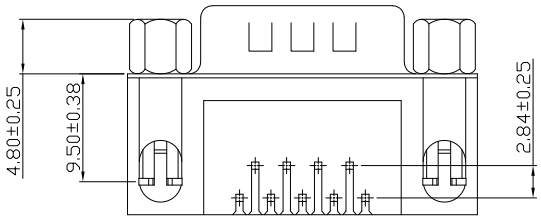

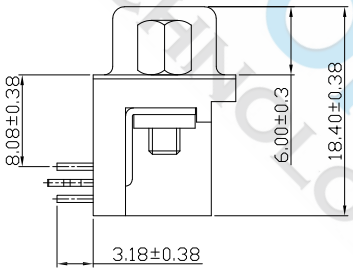

WISCONN TECHNOLOGY

DIMENSIONS TOLERANCE METRIC Up to 5 ±0.2 Above 05~15 ±0.3 Above 15~30 ±0.4 Above 30~50 ±0.5 Angle ±0.3°	UNITS	MM	FINISH	SEE NOTE	CH'K	Calvin	DRAW NAME D-SUB 9M 90度 8.08mm 鉚鎖4.8*11.8螺絲		WISCONN Technology Co.,Ltd Tel:+886-2-2790-1979 Fax:+886-2-2790-1569						
	QT'Y	N/A	DRAW	Johnson	APP'D	Selena	PART NUMBER	WDBM-09CFPBDR-8.08							
	MT'L	SEE NOTE	DE'N	Mike	DATE	January . 19 . 2024	DRAW NUMBER FILE NAME .DWG	T039	SCALE	1/1	SIZE	A4	SHEET	1	REV. A